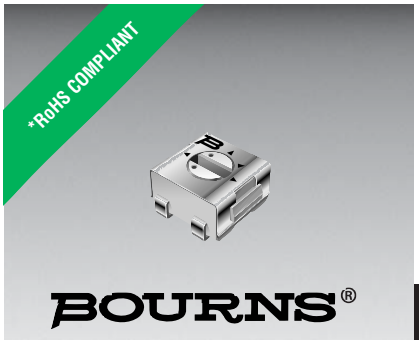

Features

- Surface Mount / Single Turn / Cermet Industrial / Sealed
- Compatible with surface mount manufacturing processes
- Compatible with popular vacuum pick-and-place equipment
- J-hook, gull-wing and pinned configurations
- Side adjust available
- Meets EIA/EIAJ/IPC/VECI SMD standard trimmer designs
- RoHS compliant* - see processing information on lead free surface mount trimmers

3314 - 4 mm Square Trimming Potentiometer

Electrical Characteristics

Standard Resistance Range
.....10 ohms to 2 megohms
(see standard resistance table)
Resistance Tolerance ..... ±20 % std.
(tighter tolerance available)
End Resistance ..... 1 % or 2 ohms max.
(whichever is greater)
Contact Resistance Variation
.....3 % or 3 ohms
Resolution ..... Infinite
Insulation Resistance .....500 vdc.
100 megohms min.
Dielectric Strength
Sea Level..... 500 vac (1 minute)
Adjustment Angle ..... 210 ° nom.

Environmental Characteristics

Power Rating (300 volts max.)
70 °C .....0.25 watt
125 °C .....0 watt
Temperature Range ... -55 °C to +125 °C
Temperature Coefficient ... ±100 ppm/°C
Humidity .....90-98 % RH,
10 cycles, 240 hours
TRS ±2 %; IR 10 megohms
Vibration .....20 G TRS ±1 %; VRS ±1 %
Shock .....100 G TRS ±1 %; VRS ±1 %
Load Life
....(@ 70 °C Rated Power 1000 Hours)
TRS ±3 %
Rotational Life .....100 cycles
TRS ±3 %
Thermal Shock .....5 cycles
TRS ±2 %; VRS ±1 %

Physical Characteristics

Mechanical Angle ..... 240 ° nom.
Torque.....180 g-cm typical
Stop Strength .....300 g-cm typical
Pushover Strength (Z Style)
.....2 kilograms (4.4 lbs.) minimum
Weight .....Approximately 0.01 oz.
Marking.....Manufacturer's code,
resistance code and date code
Wiper .....50 % (Actual TR) ±10 %
Flammability .....U.L. 94V-0
Standard Packaging
J, G and R ..... 500 pcs./7 " reel
S and Z..... 200 pcs./7 " reel
H.....100 pcs./tube
Adjustment Tool.....H-90

DIMENSIONS: MM (INCHES)
TOLERANCES: ± 0.25 (.010) EXCEPT WHERE NOTED

Product Dimensions

3314J-1

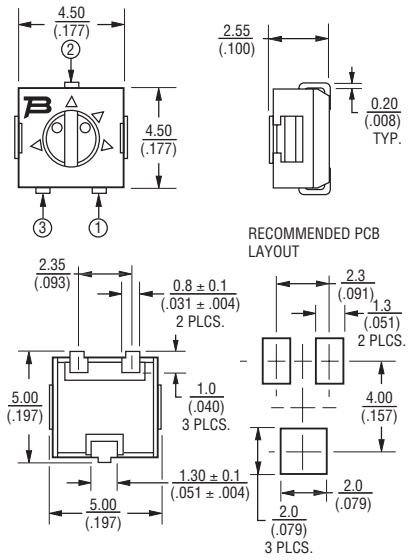

3314G-1

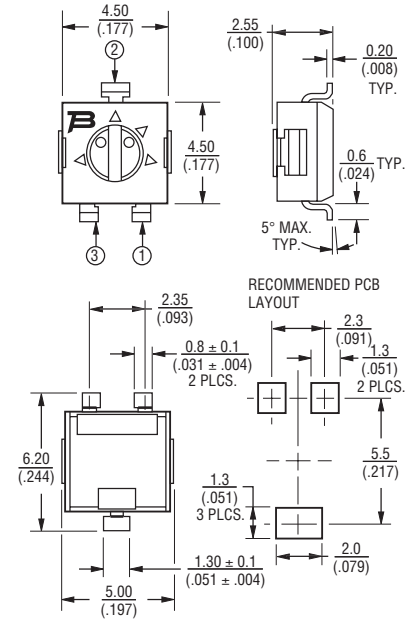

3314J-1, G-1, R-1, H-1 (Bourns Marking, Straight Slot)

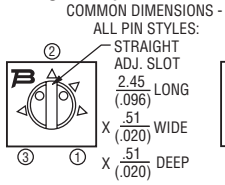

3314J-2, G-2, R-2, H-2 (Bourns Marking, Cross Slot)

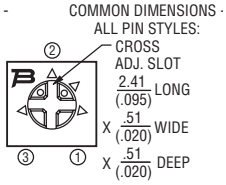

3314J-3, G-3, R-3, H-3 (Reverse Marking, Straight Slot)

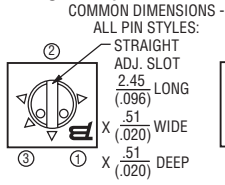

3314J-4, G-4, R-4, H-4 (Reverse Marking, Cross Slot)

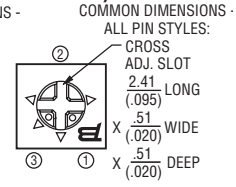

How To Order

3314 J - 1 - 502 E

Model
Style
Standard or Modified Product Indicator (Styles J, G, R, H & S)
-1 = Single Slot
-2 = Cross Slot
-3 = Single Slot w/Reverse Marking
-4 = Cross Slot w/Reverse Marking
Product Indicator (Style Z only)
-GA4 = Single Slot
-1 = Cross Slot
-3 = Single Slot w/Reverse Marking
-4 = Cross Slot w/Reverse Marking
Resistance Code
Embossed Tape Designator**
E = Styles J, G and R: 500 pcs./7 " reel
Styles S and Z: 200 pcs./7 " reel
G = Styles J and G: 3000 pcs./13 " reel
Style R: 2500 pcs./13 " reel
Styles S and Z: 1000 pcs./13 " reel
**Style H is available in tube packaging only.

Standard Resistance Table

Resistance (Ohms)	Resistance Code
10	100
20	200
50	500
100	**101**
200	**201**
500	**501**
1,000	**102**
2,000	**202**
5,000	**502**
10,000	**103**
20,000	**203**
50,000	**503**
100,000	**104**
200,000	204
250,000	254
500,000	504
1,000,000	105
2,000,000	205

Popular distribution values listed in boldface.
Special resistances available.

*RoHS Directive 2002/95/EC Jan 27 2003 including Annex.
Specifications are subject to change without notice.
Customers should verify actual device performance in their specific applications

3314 - 4 mm Square Trimming Potentiometer

BOURNS®

Product Dimensions

3314R-1

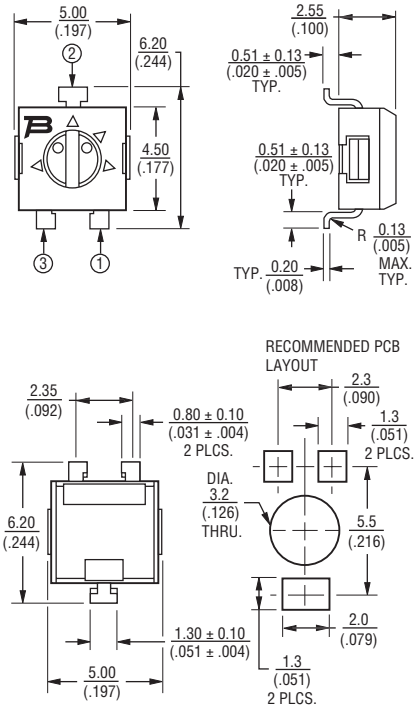

3314H-1

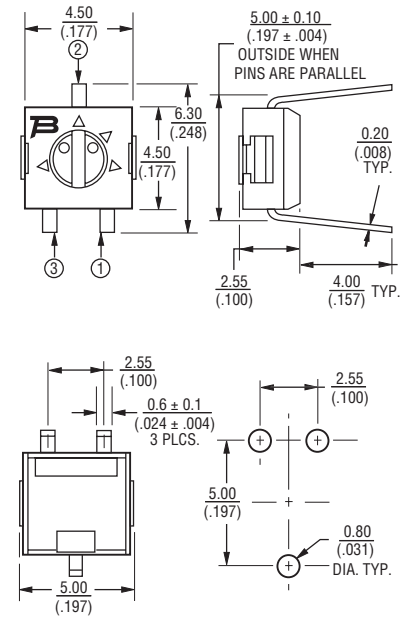

Packaging Specifications - J, G and R Styles

(J, G Styles)

TAPE

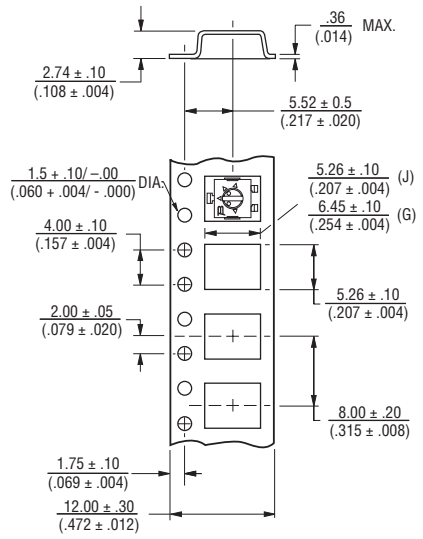

REEL

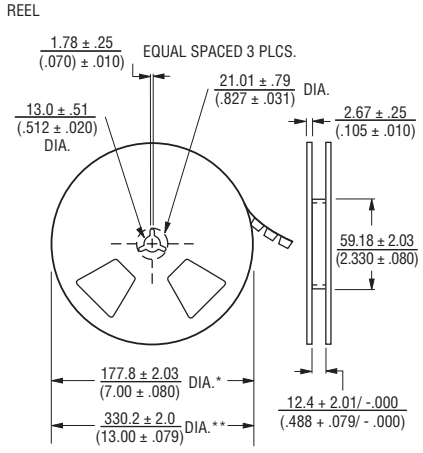

* Embossed Tape Designator "E"
** Embossed Tape Designator "G"
(See How To Order chart for further information.)

Meets EIA specification 481.

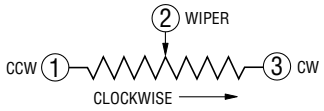

(R Style)

TAPE

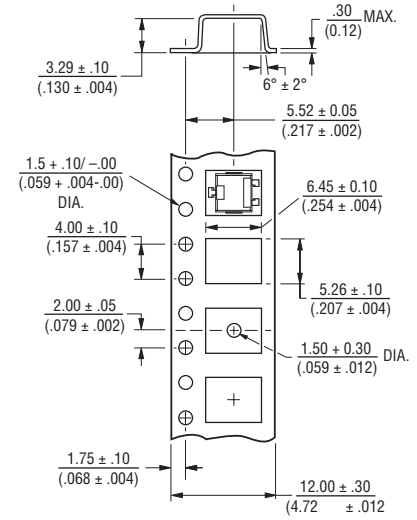

REEL

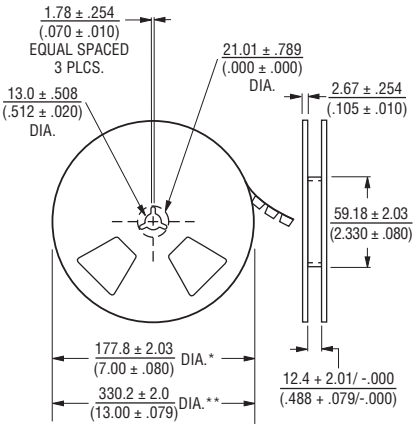

* Embossed Tape Designator "E"
** Embossed Tape Designator "G"
(See How To Order chart for further information.)

Meets EIA specification 481.

DIMENSIONS: MM (INCHES)

TOLERANCES: ± 0.25 (.010) EXCEPT WHERE NOTED

Specifications are subject to change without notice.
Customers should verify actual device performance in their specific applications

3314 - 4 mm Square Trimming Potentiometer

BOURNS®

Product Dimensions

3314S-1
(Bourns Marking, Straight Slot)

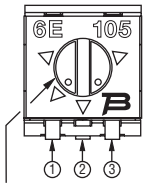

ROTOR POSITIONED AS SHOWN WITHIN ± 22° OF CENTERLINE OF TERMINAL 2

3314S-2
(Bourns Marking, Cross Slot)

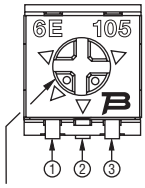

ROTOR POSITIONED AS SHOWN WITHIN ± 22° OF CENTERLINE OF TERMINAL 2

3314S-3
(Reverse Marking, Straight Slot)

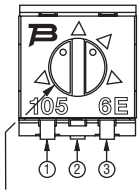

ROTOR POSITIONED AS SHOWN WITHIN ± 22° OF CENTERLINE OF TERMINAL 2

3314S-4
(Reverse Marking, Cross Slot)

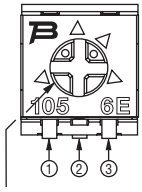

ROTOR POSITIONED AS SHOWN WITHIN ± 22° OF CENTERLINE OF TERMINAL 2

3314S
Common Dimensions

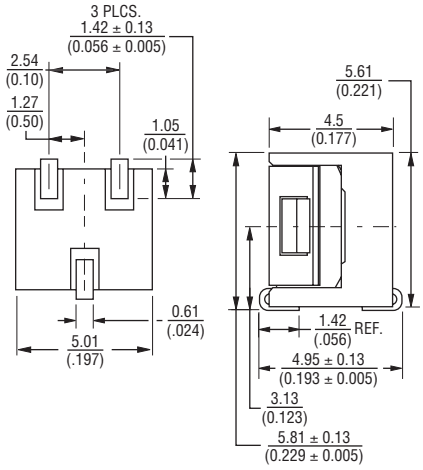

RECOMMENDED PCB LAYOUT

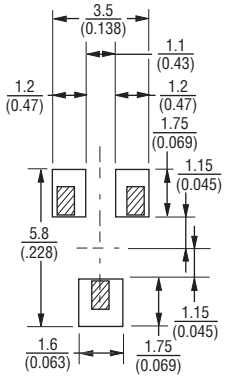

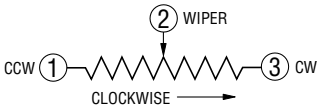

DIMENSIONS: MM (INCHES)

TOLERANCES: ± 0.30 (.012) EXCEPT WHERE NOTED

Packaging Specifications

(S Style)

TAPE

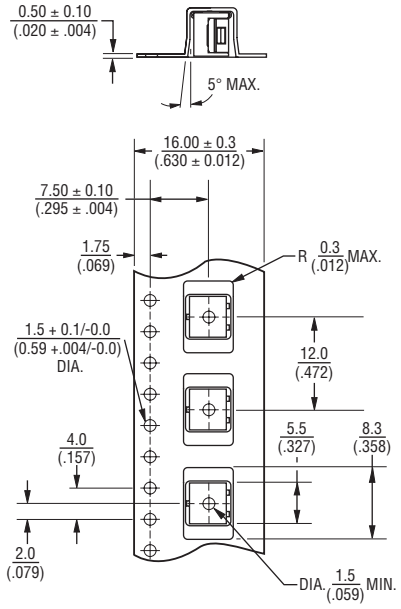

REEL

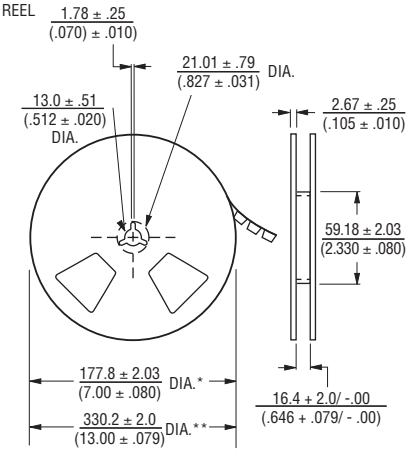

* Embossed Tape Designator "E"
** Embossed Tape Designator "G"
(See How To Order chart for further information.)

Meets EIA specification 481.

Specifications are subject to change without notice.
Customers should verify actual device performance in their specific applications

Product Dimensions

3314Z-1-(RC) E
(Cross Slot)

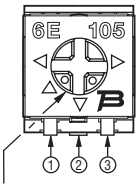

ROTOR POSITIONED AS SHOWN WITHIN ± 22° OF CENTERLINE OF TERMINAL 2

3314Z-GA4-(RC) E
(Straight Slot)

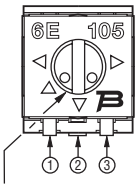

ROTOR POSITIONED AS SHOWN WITHIN ± 22° OF CENTERLINE OF TERMINAL 2

3314Z-3
(Reverse Marking, Straight Slot)

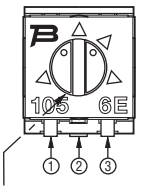

ROTOR POSITIONED AS SHOWN WITHIN ± 22° OF CENTERLINE OF TERMINAL 2

3314Z-4-(RC) E
(Reverse Marking, Cross Slot)

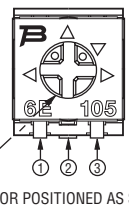

ROTOR POSITIONED AS SHOWN WITHIN ± 22° OF CENTERLINE OF TERMINAL 2

3314Z
Common Dimensions

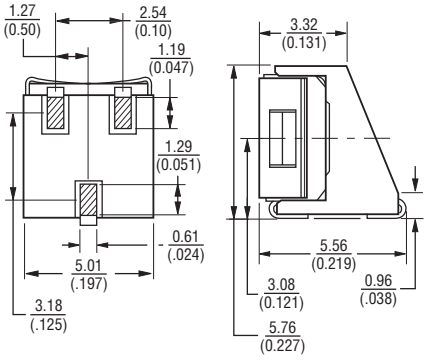

RECOMMENDED PCB LAYOUT

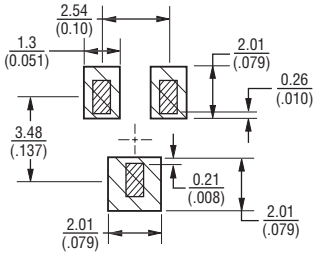

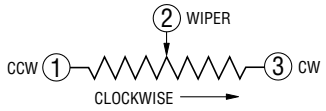

DIMENSIONS: MM (INCHES)

TOLERANCES: ± 0.25 (.010) EXCEPT WHERE NOTED

Packaging Specifications

(Z Style)

TAPE

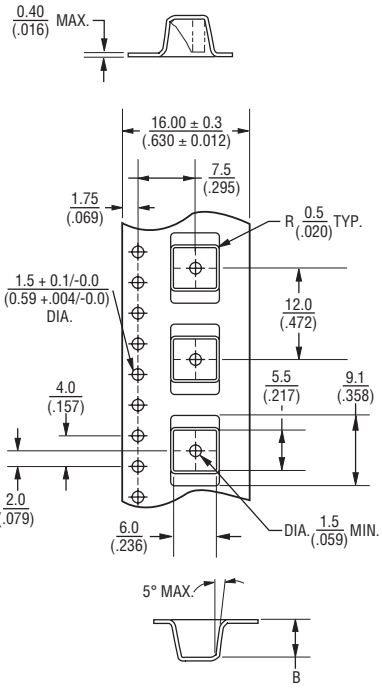

REEL

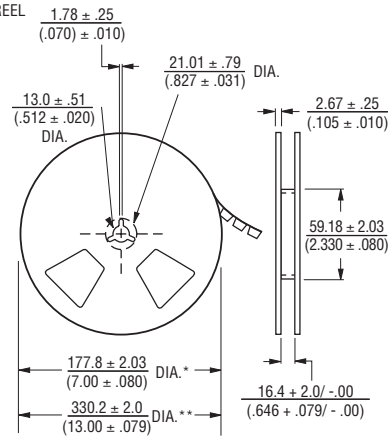

* Embossed Tape Designator "E"
** Embossed Tape Designator "G"
(See How To Order chart for further information.)

Meets EIA specification 481.

Specifications are subject to change without notice.
Customers should verify actual device performance in their specific applications